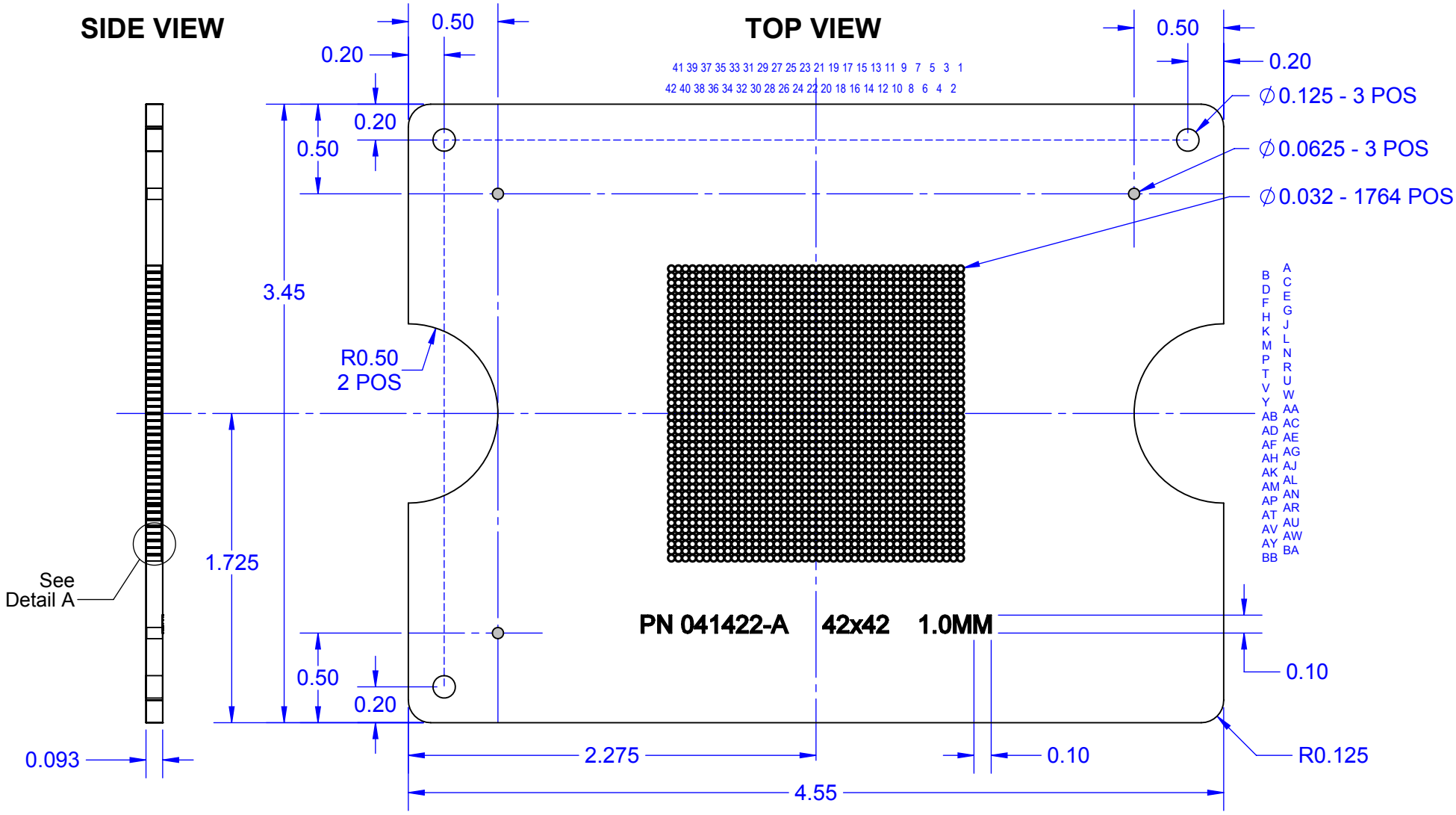

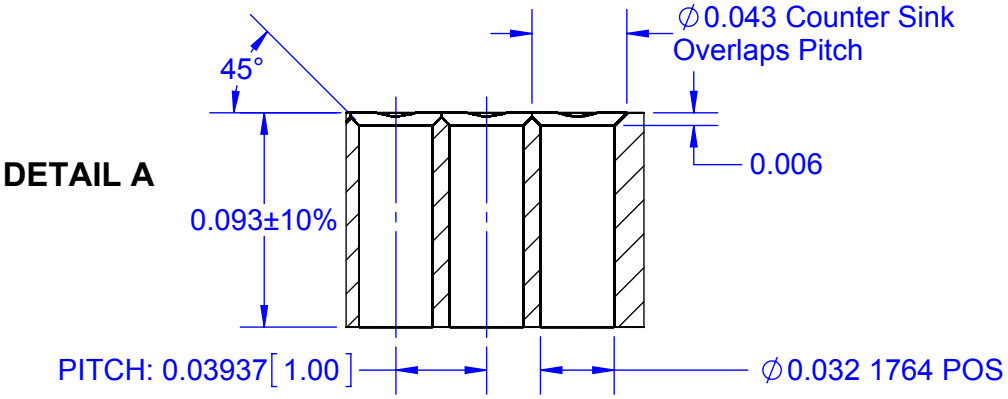

NOTES:
1. DIMENSIONS IN INCH UNLESS OTHERWISE STATED.
2. MATERIAL: FR4 COLOR BLACK OR STANDARD.
3. LEGEND: WHITE INK.
4. PIN REFERENCE DESIGNATORS NOT MARKED ON PCB

APPROVALS		DATE	TopLine®			
DRAWN	T.Au	04/07/15				
ENG	M. Hart	04/07/15	TITLE	CCGA1752 TRAY INSERT MATRIX 42x42 PITCH 1.0MM		
MFG						
QA			SCALE	SIZE	DRAWING NO.	REV
CUST			1.25:1	A	041422	A
REVISED			DO NOT SCALE DRAWING			SHEET 1 OF 2