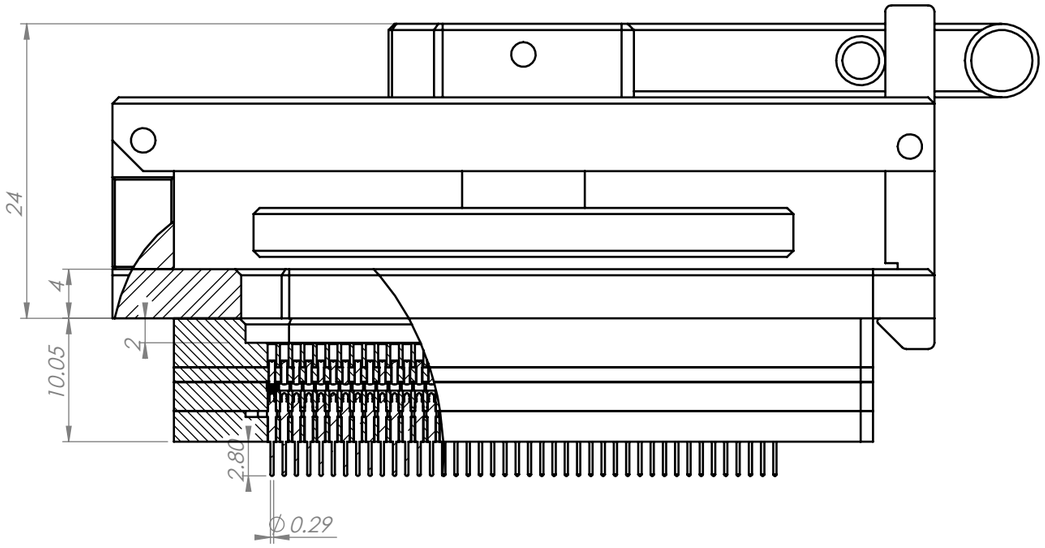

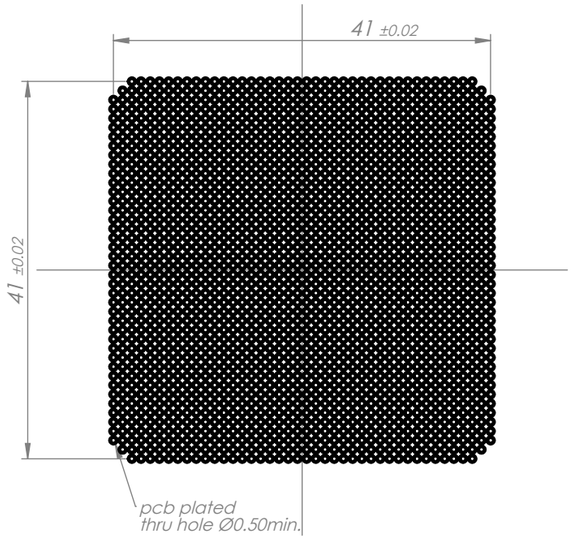

PCB LAYOUT

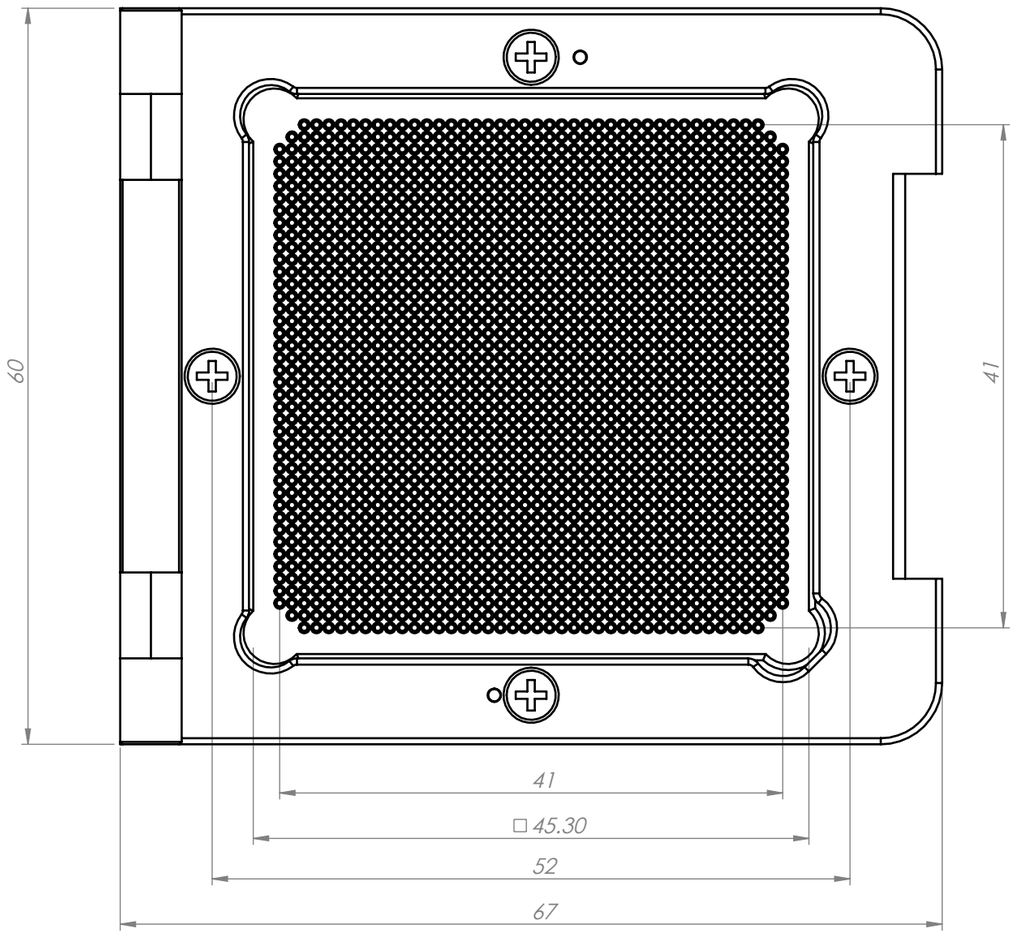

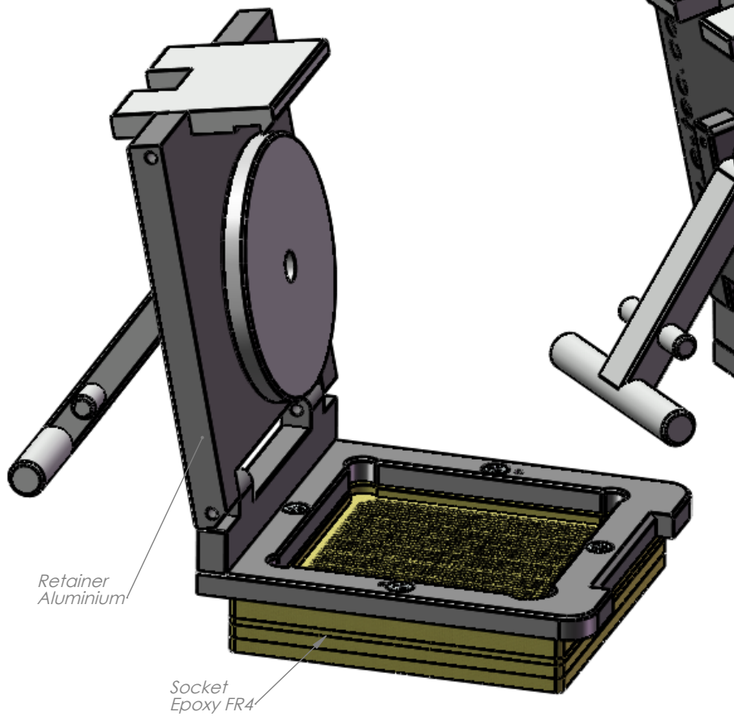

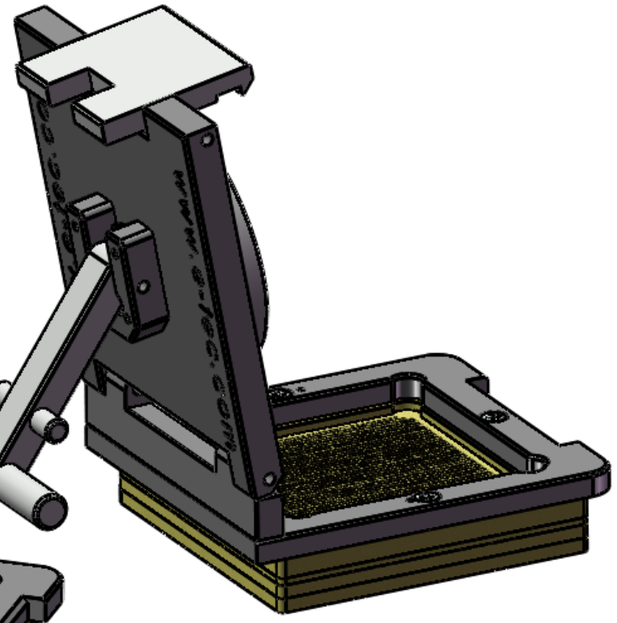

A3H	Scale 2:1	UNLESS OTHERWISE SPECIFIED: DIMENSIONS ARE IN MILLIMETERS GENERAL TOLERANCES ISO 2768m	Remark: CGA Clamshell socket,1752 pins, Pitch 1.00mm, matrix 42x42 code MI = Special Clamshell
patented		REV 0 modif:	"Order code" CPC1752-1070-427A
The information contained in this drawing is proprietary and shall not be reproduced or disclosed in whole or in part or used for any design or manufacture except whe such user possesses direct, written authorization		NAME / DATE	"Production code" 114270
		DRAWN sme 04.12.2014	
		REV'D - -	
		CHK'D - -	
		APPV'D sme 19.01.2015	