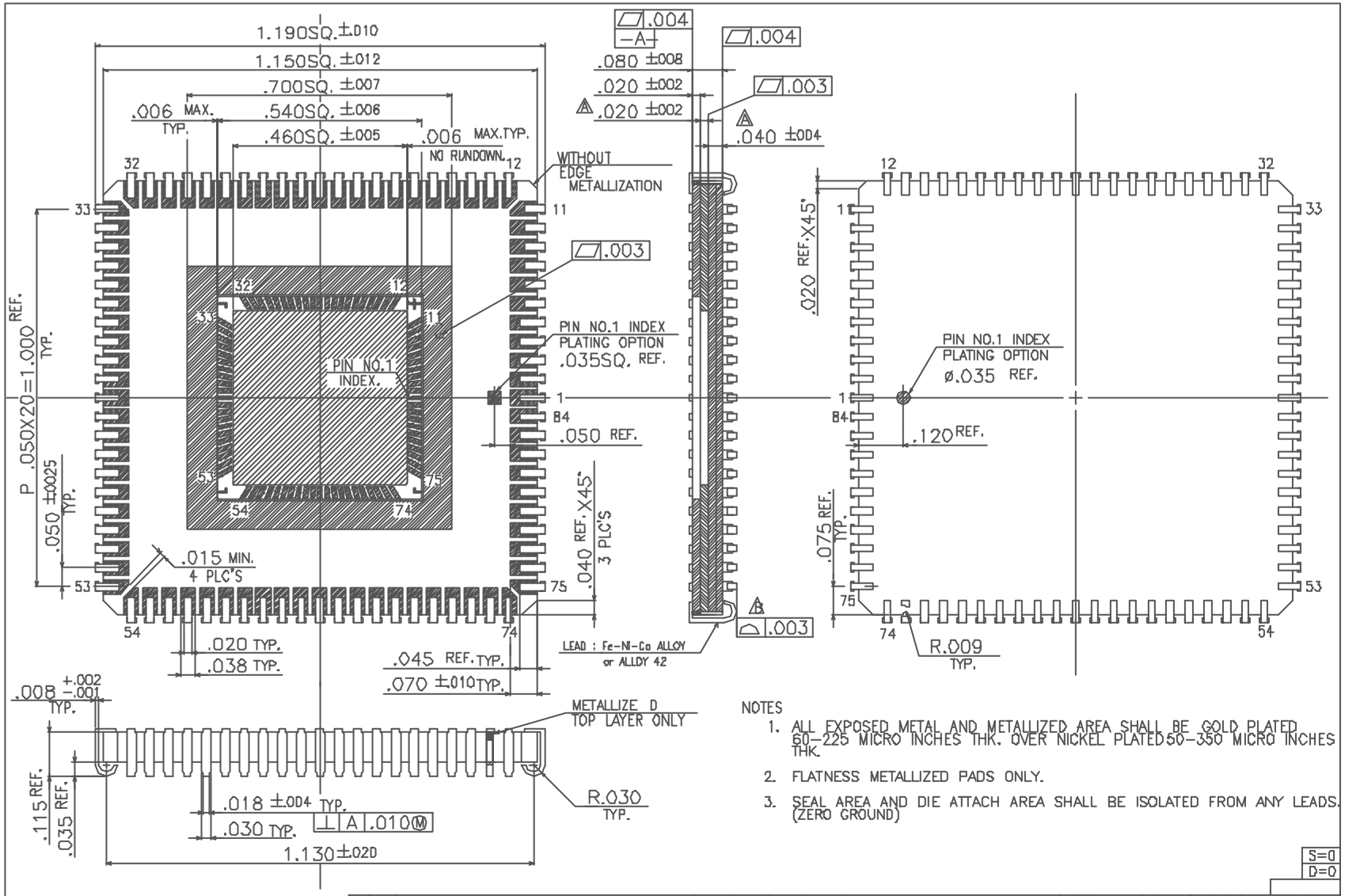

NOTES

1. ALL EXPOSED METAL AND METALLIZED AREA SHALL BE GOLD PLATED 60–225 MICRO INCHES THK. OVER NICKEL PLATED 50–350 MICRO INCHES THK.
2. FLATNESS METALLIZED PADS ONLY.
3. SEAL AREA AND DIE ATTACH AREA SHALL BE ISOLATED FROM ANY LEADS. (ZERO GROUND)

S=0
D=0

MODIFICATIONS					
B	ADDED : DIMENSION	7-26-'94	N.K	T.Y / H.M	N.K
A	CHANGED : DIMENSIONS	7-4-'89	Y.I	S.N / T.T	Y.S
	CHANGE	DATE	DRAWN	CHECKED	APPROVED

NAME (.460 SQ. CAV.) 84 J SHAPED CHIP CARRIER
SCALE 10/1
MATERIAL KYOCERA A-440
TOLERANCES: UNLESS OTHERWISE SPECIFIED ±.005 TWO PLACE DECIMALS
KYOCERA
KYOCERA CORPORATION KYOTO JAPAN

DRAWN	CHECKED	APPROVED	DATE
N.K	T.Y / H.M	M.K	07-26-'94

DRAWING NO. PB-F89299-B
SHEET 1/2

PB-F86521-A (MKO-84J) MOD.

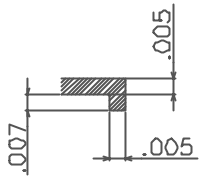

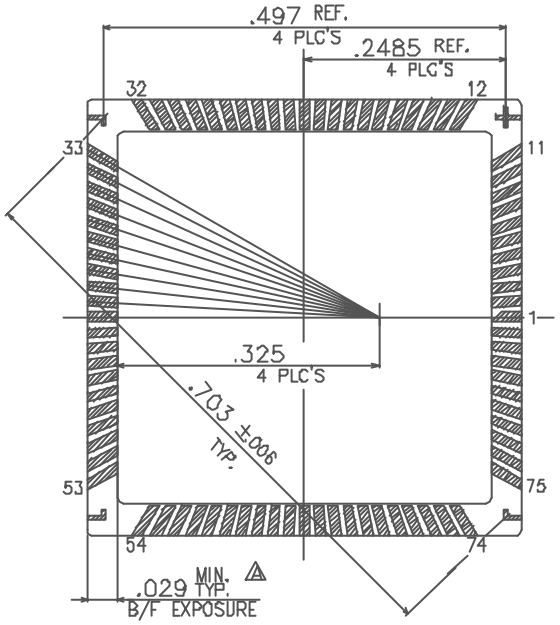

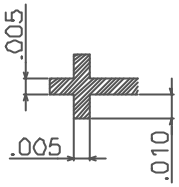

	LEAD ORIGIN 0.3250	LEAD SPACING 0.0060	LEAD WIDTH 0.0116	
LEAD NUMBER	LEAD ANGLE	LEAD CENTER	LEAD START	LEAD END
1 22 43 64	0.000	0.0000	−0.0060	0.0060
2 21 23 42 44 63 65 84	3.144	0.0179	0.0121	0.0237
3 20 24 41 45 62 66 83	6.243	0.0356	0.0298	0.0414
4 19 25 40 46 61 67 82	9.329	0.0534	0.0475	0.0593
5 18 26 39 47 60 68 81	12.392	0.0714	0.0655	0.0773
6 17 27 38 48 59 69 80	15.424	0.0897	0.0837	0.0957
7 16 28 37 49 58 70 79	18.417	0.1082	0.1021	0.1143
8 15 29 36 50 57 71 78	21.362	0.1271	0.1209	0.1333
9 14 30 35 51 56 72 77	24.253	0.1464	0.1400	0.1528
10 13 31 34 52 55 73 76	27.084	0.1662	0.1597	0.1727
11 12 32 33 53 54 74 75	29.848	0.1865	0.1798	0.1932

MODIFICATIONS					
⚠	ADDED : DIMENSION CHANGE	7-4-'89	Y.I	S.M / T.T	Y.S
		DATE	DRAWN	CHECKED	APPROVED

NAME (.460 SQ. CAV.) 84 J SHAPED CHIP CARRIER

SCALE 10/1

MATERIAL

TOLERANCES: UNLESS OTHERWISE SPECIFIED ± .005 TWO PLACE DECIMAL

KYOCERA

KYOCERA CORPORATION KYOTO JAPAN

DRAWN	CHECKED	APPROVED	DATE
Y.IKEDA	S.M / T.D	Y.S	06-28-'89

DRAWING NO. PB-F89299-B

SHEET 2/2