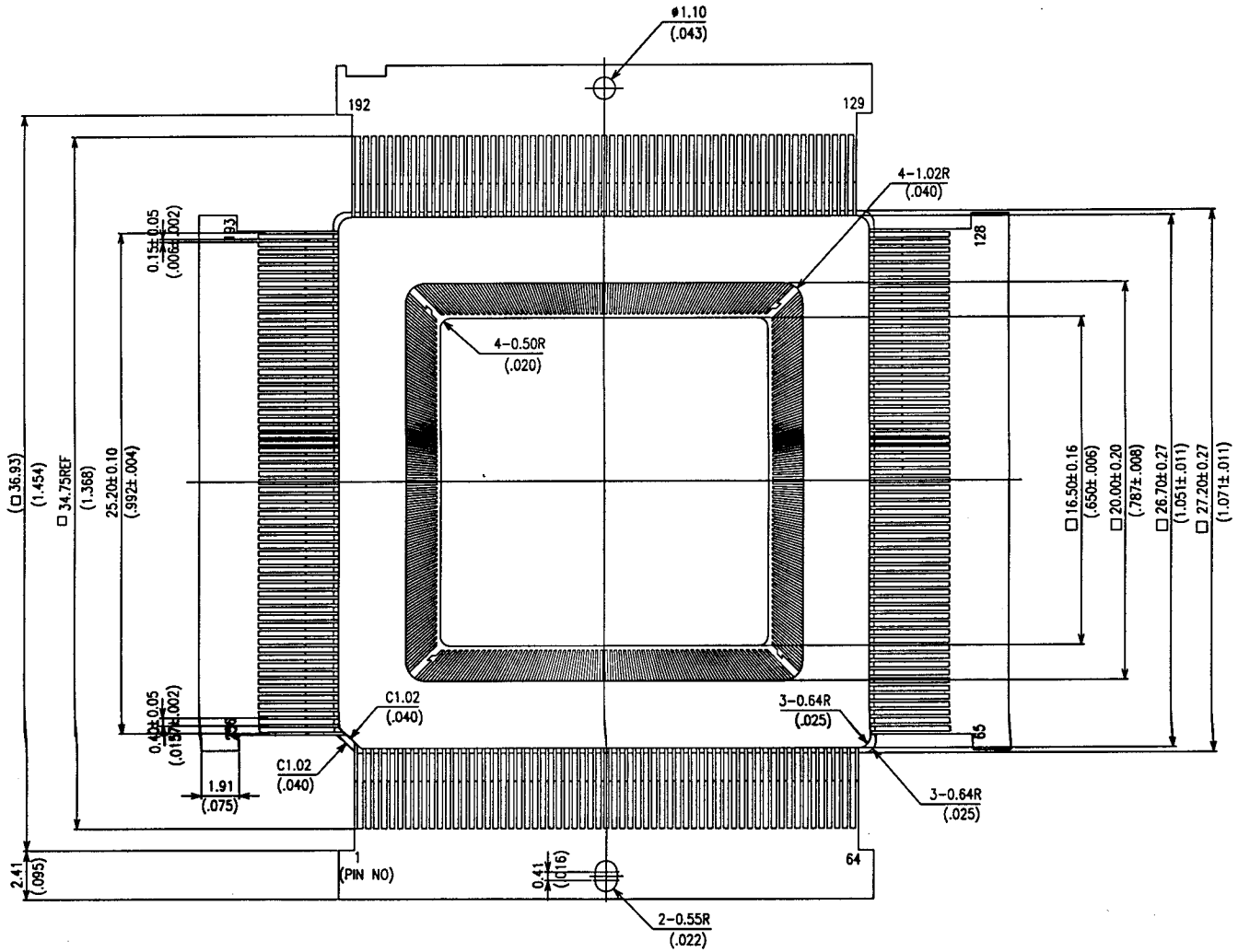

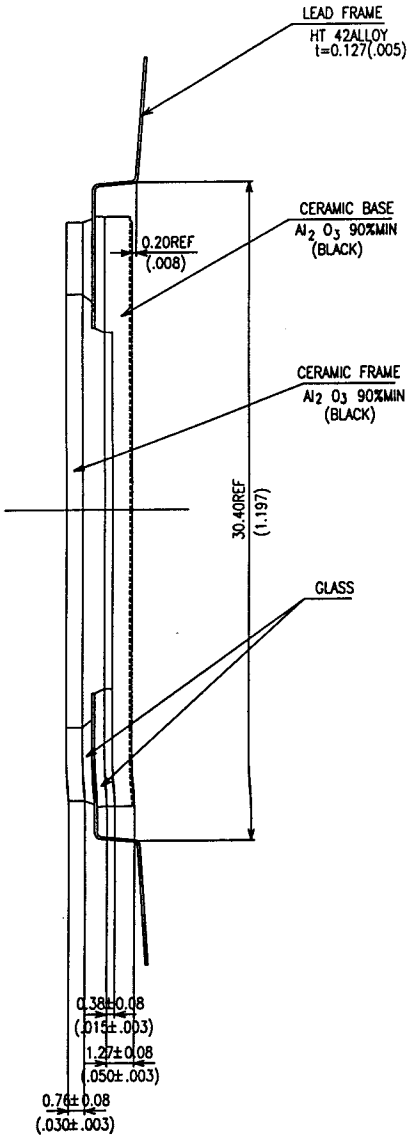

MODIFICATIONS							NAME 256LD QUAD K-PACK'Z'(16.5SQ)	TOLERANCES: UNLESS OTHERWISE SPECIFIED	DRAWN	CHECKED
							SCALE 6 : 1 / MATERIAL		APPROVED	DATE
		CHANGE	DATE	DRAWN	CHECKED	APPROVED	KYOCERA CORPORATION	KYOTO JAPAN	DWG No. QC-256319-WZ (2/1)	

CQ225601

CQ225601