Part # **SOT223E7A-DC**
Daisy Chain

Tel 1-714-898-3830
info@topline.tv

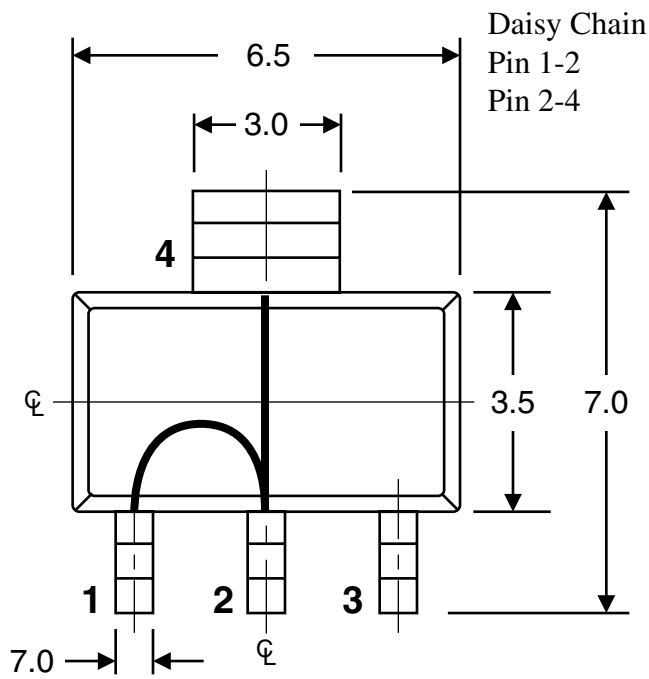

Top View

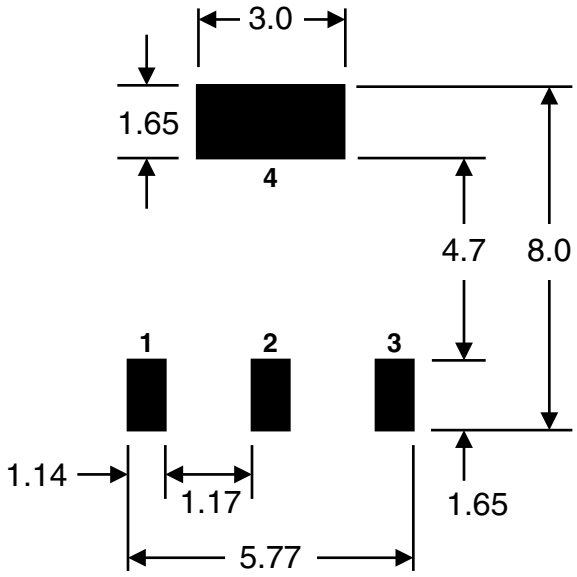

PC Board

Dimensions = mm

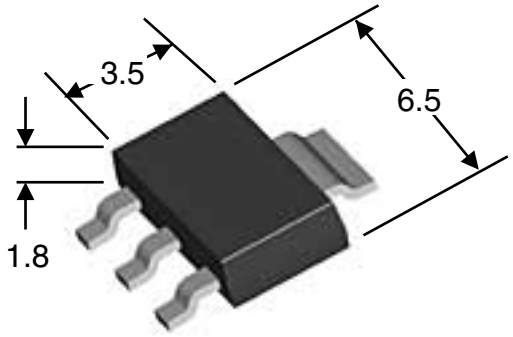

Quick View

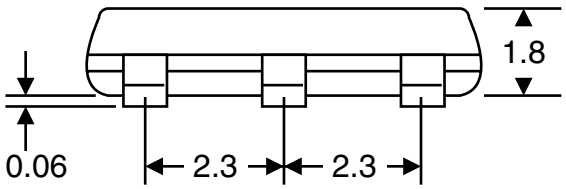

Side View Detail

 ©2002 TopLine. All Rights Reserved.