TO-8 CAN (LID / CAP)

SECTION A-A

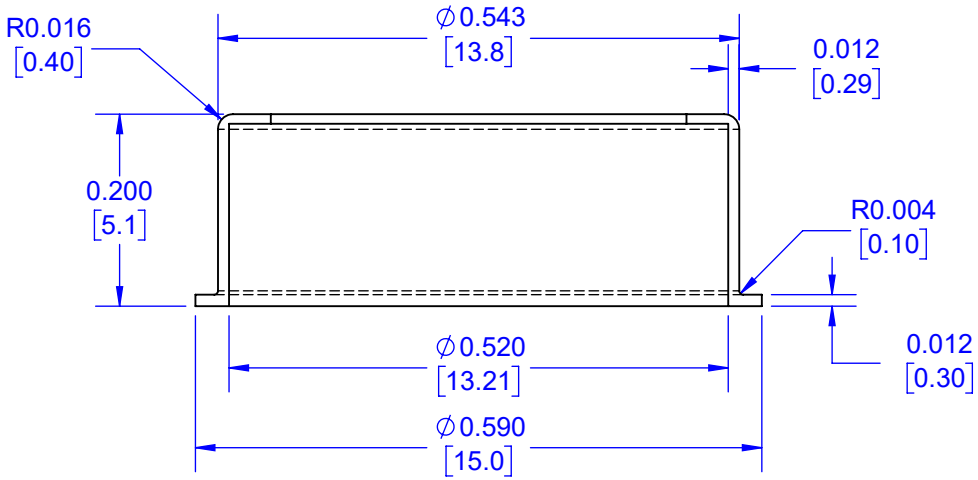

TOP VIEW

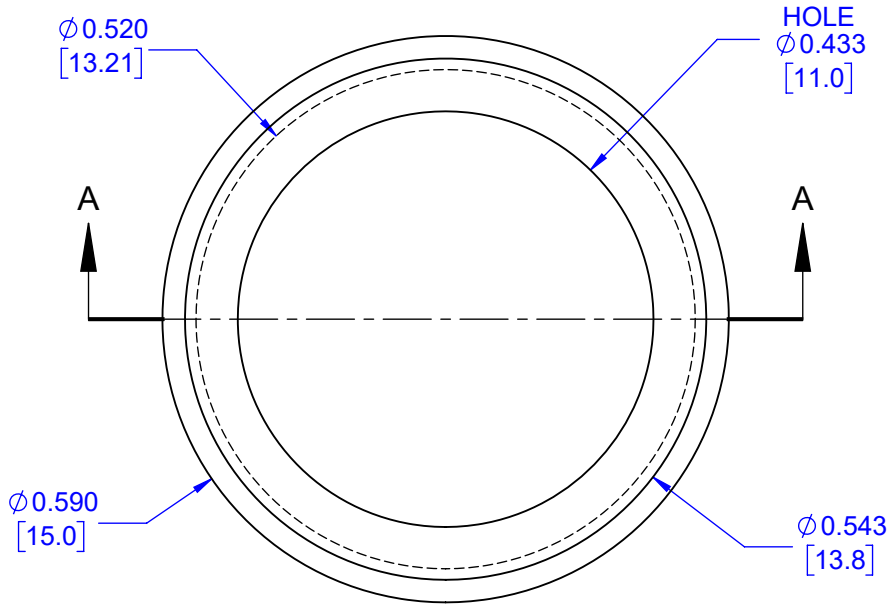

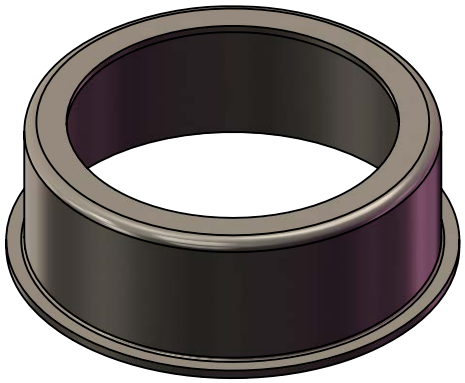

MODEL

Notes: (Unless Otherwise Specified)
1) DIMENSIONS: INCH [mm].
2) CAN - CAP LID FOR TO-8 HEADER.
3) BASIC MATERIAL SPCC.
4) PLATING: NICKEL 120~250 micro-inch (3~6um).
5) WITHOUD WELD PROJECTION.

APPROVALS		DATE	TopLine®			
DRAWN	T.Au	07/20/25				
ENG	M. Hart	07/20/25	TITLE	TO-8 CAN WITH 11MM HOLE 0.200" (5.1mm) HIGH		
MFG						
QA			SCALE	SIZE	DRAWING NO.	REV
CUST			5:1	A	171120	A
REVISED			DO NOT SCALE DRAWING			SHEET 1 OF 1