TOP VIEW

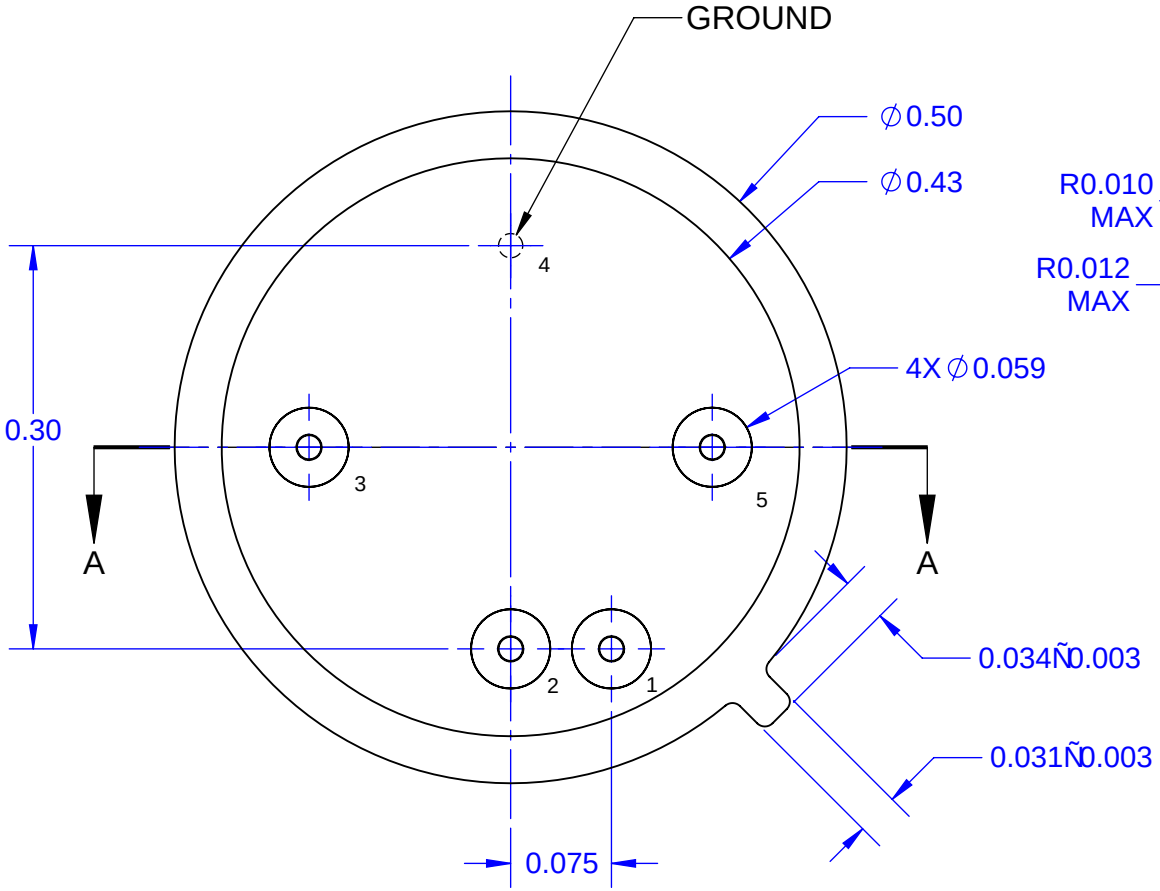

SECTION VIEW A-A

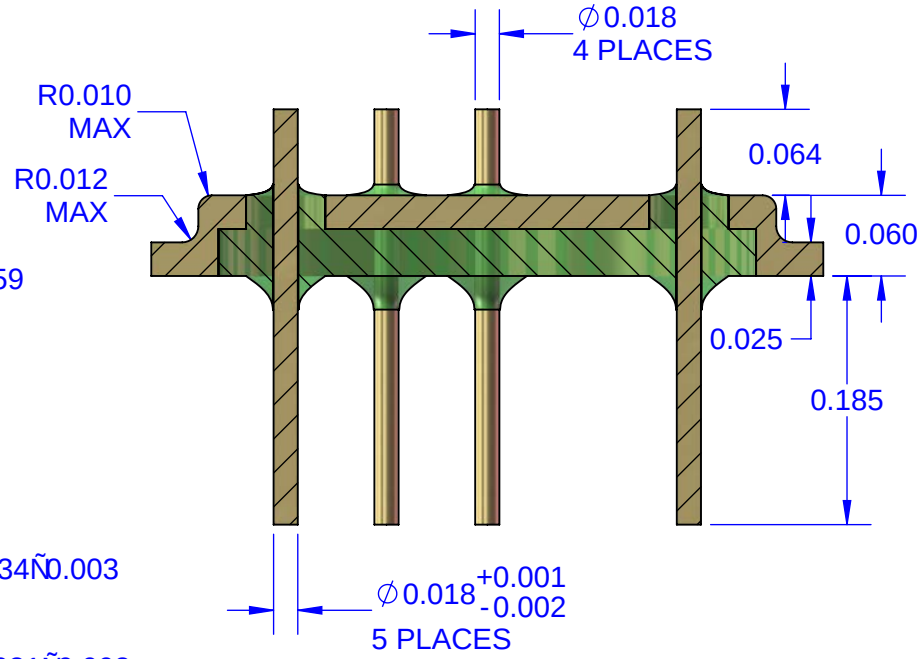

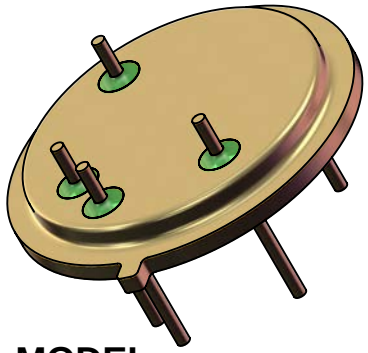

MODEL
SCALE 4:1

NOTES:
1. DIMMENSIONS INCH (Unless Otherwise Specified).
2. BODY KOVAR ASTM F45 ALLOY 42.
3. LEADS KOVAR ASTM F15.
4. GLASS 7052 OR EQUIVALENT.
5. PLATING: Ni 100~300 Micro-inch
   Au 50 Micro-inch MIN

APPROVALS		DATE	TopLine®			
DRAWN	T.Au	11/2/2020				
ENG	M. Hart	11/2/2020	TITLE	TO8 HEADER 5L 4-ISO + 1-GND STRAIGHT PIN		
MFG						
QA			SCALE	SIZE	DRAWING NO.	REV
CUST			7:1	A	150805	A
REVISED			DO NOT SCALE DRAWING			SHEET 1 OF 1