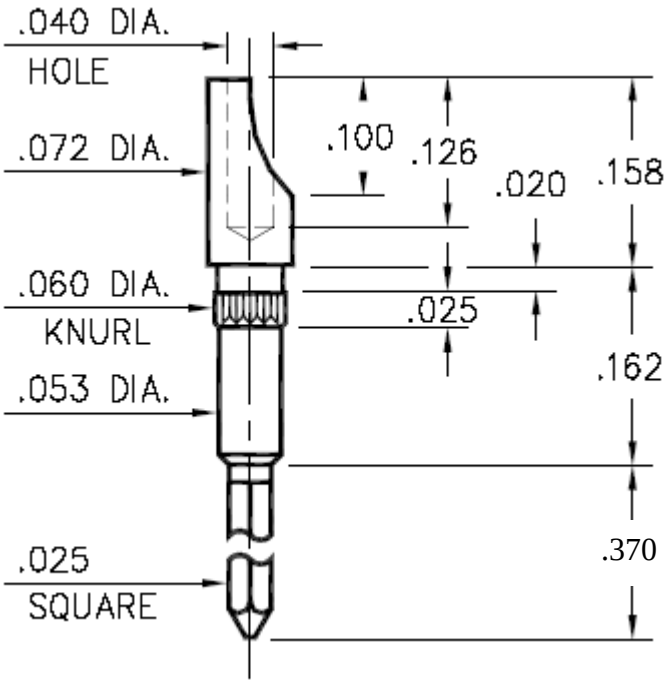Gold Cup Terminal
104xxx Series